Outsunny Assembly Instructions

INbfa025V02_845-153

NO.	1	2	3	4	5	6	A	E	G	I	J
	14 pcs	4 pcs	6 pcs	4 pcs	10pcs	1 pcs	4 pcs	8pcs	2 pcss	3 pcs	8 pcs

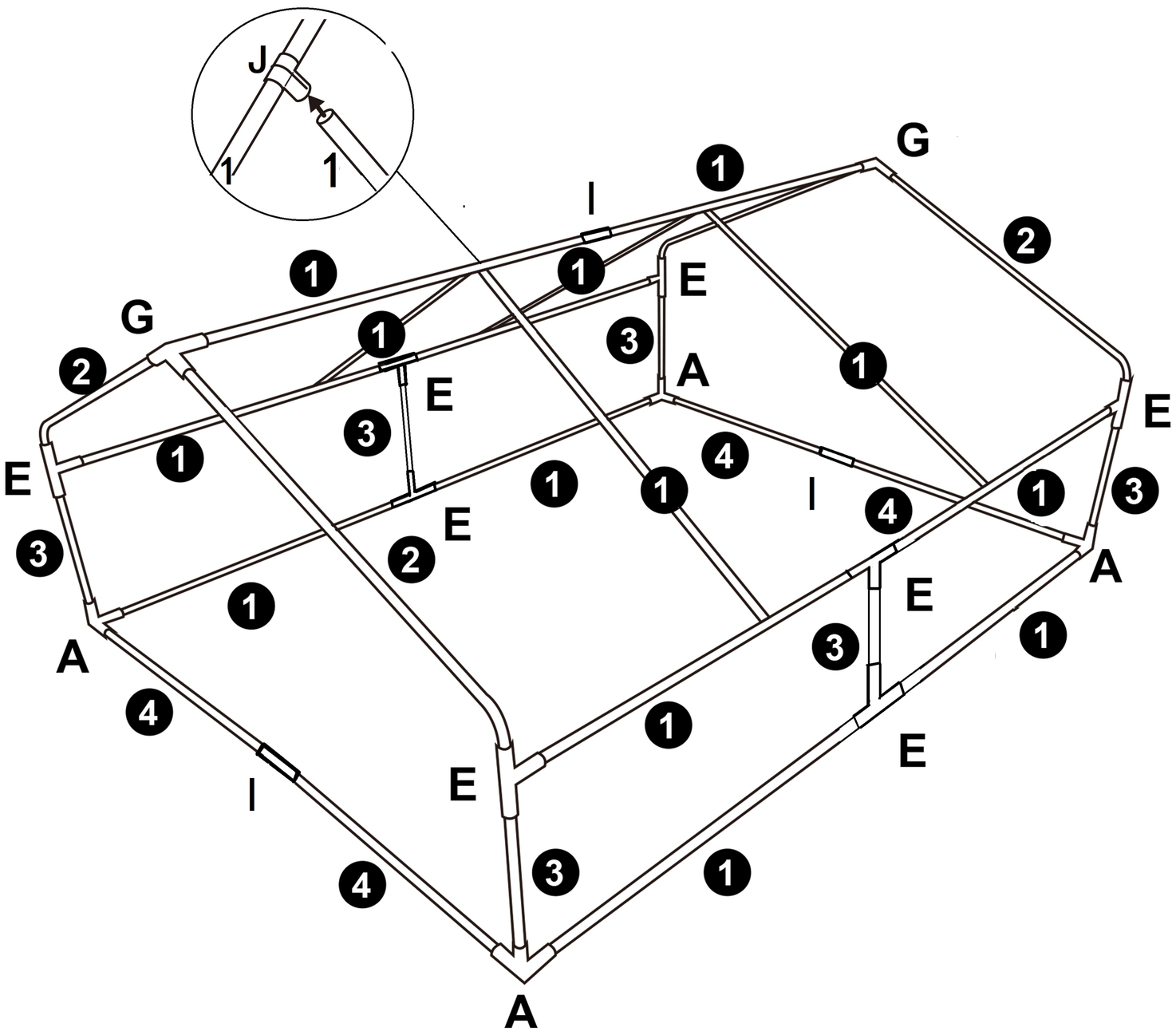

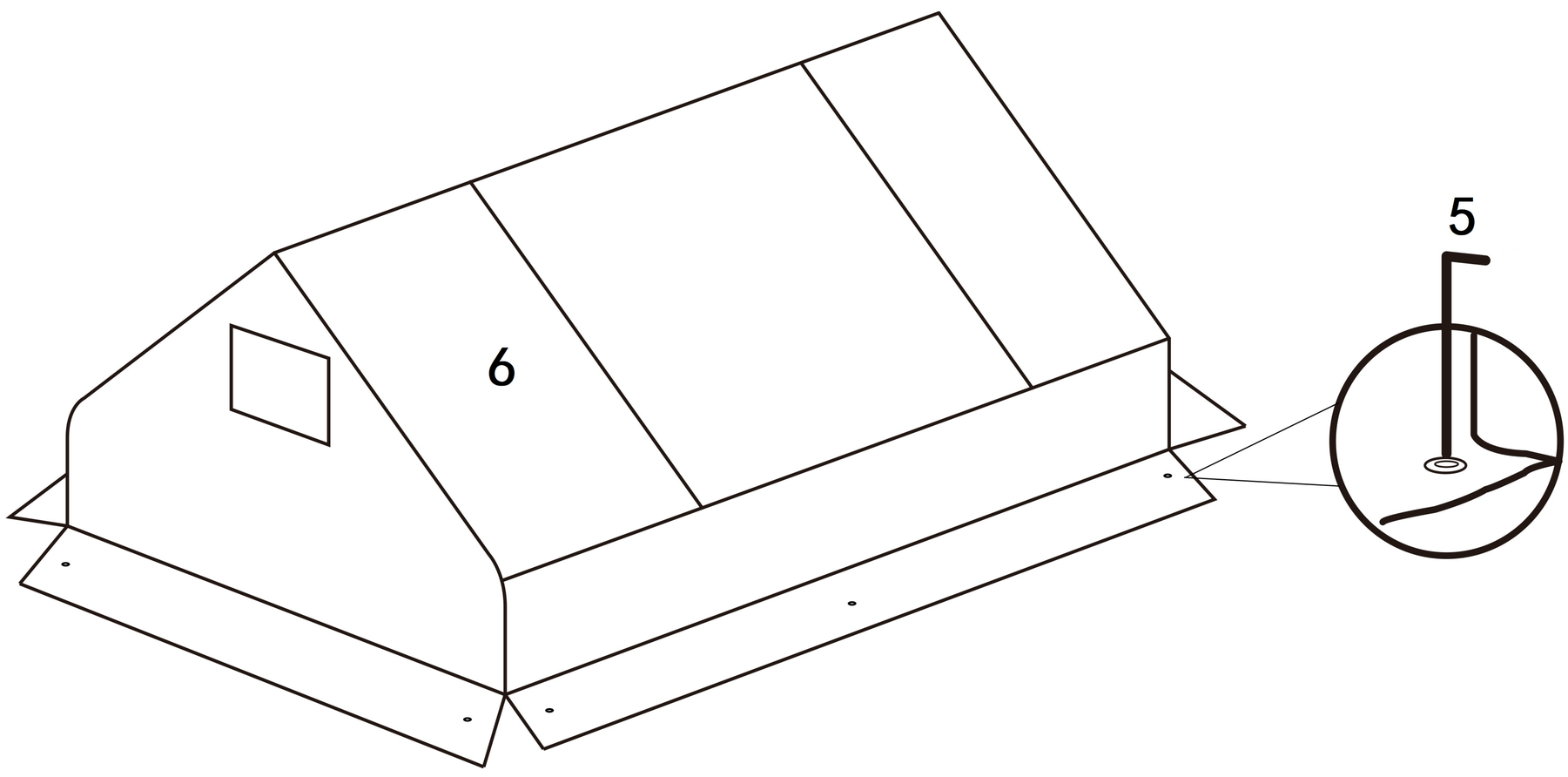

US

001-877-644-9366
customerservice@aosom.com

CA

001-855-537-6088
customerservice@aosom.ca

UK

0044-800-240-4004
enquiries@mhstar.co.uk

DE

0049-(0)40-88307530
service@aosom.de

FR

0033-1-84166106
contact@aosom.fr

ES

0034-931294512
atencioncliente@aosom.es

IT

0039-0249471447
clienti@aosom.it

Aosom