921-127

Vinsetto Assembly Instructions

A 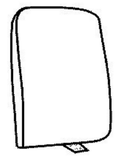 1X	G 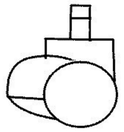 5X
B 1X	H M6X20MM 4X
C(L) 1X	I M6X25MM 4X
C(R) 1X	
D 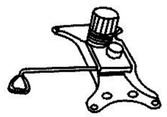 1X	J 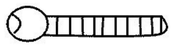 M8 X60MM 4X
E 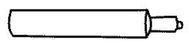 1X	K 4X
	L 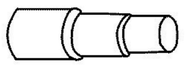 1X
F 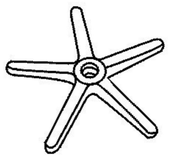 1X	M 1X

1

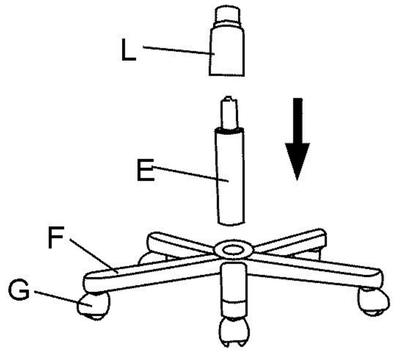

2

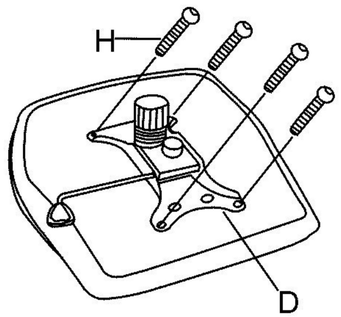

3

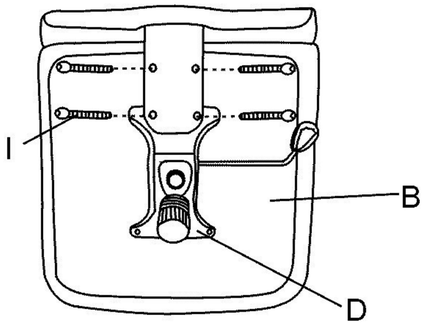

4

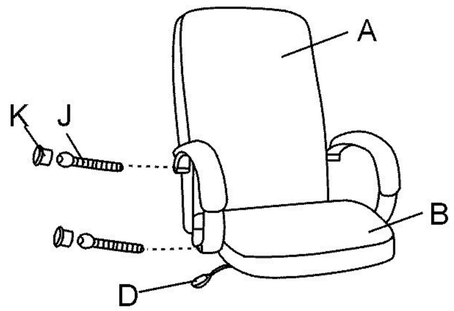

5

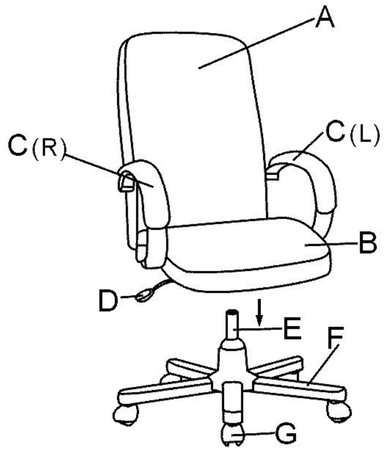
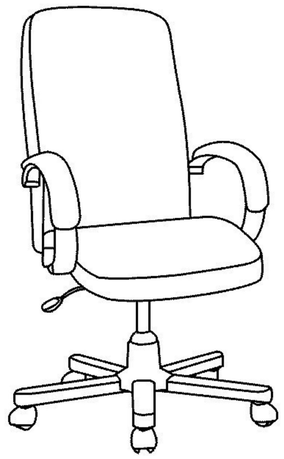
6