820-157/820-157V01

User Manual & Safety Instruction

Instruction Manual

WARNING: Please read these instructions carefully before using the Bio ethanol fireplace. Non-compliance with the safety rules can cause serious burns, or even a fire.

Thank you for choosing bio ethanol fireplace. We offers a delightful fireplace experience to anyone in a condo, apartment, office, or home without a chimney. No special permits, no installation or construction is required to enjoy these fabulous Bio-ethanol fuel fireplaces. They also do not require electrical or gas connection, Bio fireplaces are made from stainless steel and commercial-quality cold rolled steel,which is then painted. Each fireplace includes cylindrical/rectangular/square burners and a burner holder that prevents burners from tipping . Several models include firebox burner with opening / close tool so fire can be extinguished safely.

Assembly & Installation

The fireplace must only be installed on a solid surface of non-flammable material. Please remove all packaging and Information material before assembly. Please make sure to use a rawl plug that suits the walls construction, for wall mounted models. For wall mounted unites, there should NOT be any electrical cables and outlets located behind your fireplace.

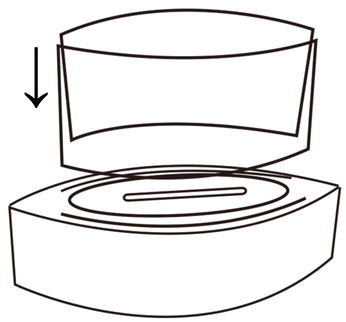

Before using the Bio Fireplace

•The fireplace is meant for indoor use.

•We recommend that you place a fire extinguisher near by your fireplace.

•The fireplace is not suitable for heating purposes.

•Ensure that flammable products and materials (curtains, furniture etc.) are at least 1m / 40" from the Fireplace.

•Keep children and pets away from the fireplace.

•Do not cover the fireplace. Do not place any flammable materials or clothingon the fireplace.

•Do not smoke while lighting the burners of the fireplace

•Do not use any petrol products: spirits, essence, etc.

•Do not use the fireplace in caravans, boats, or in vehicles.

•Do not use the fireplace in non-ventilated rooms. People with breathing problems need to be advised by their doctors before use.

•We do not recommend placing the fireplace in a bedroom or a bathroom. If you wish to use the fireplace in a small room (less than 20sqm / 220 sqf), the doors should stay open or keep a window open, the ventilation of the room will be required.

•Do not stock the bio ethanol nearby a Bio Fireplace.

•Do not use the fireplace to cook food, to heat water or to grill meat.

•Do not use the fireplace if flammable gas is in the room.

•In case of burning injuries, immediately call your doctor / physician or hospital for a treatment.

•Do not apply any treatment on burned skin by yourself

Starting Up

Filling the burner box or cylindrical burners:

•Fill the burner box / cylindrical burners with the fuel up to the maximum of 2 / 3 of each can.

•Spilled alcohol must be removed with an absorbent tissue and cleaned with water to prevent ignition outside the burner reservoir.

•CAUTION: Spilled alcohol may lead to matt stains on parquet or equal flooring.

•ATTENTION: The fuel should be stored at room temperature to facilitate its ignition.

•CAUTION: Fuel must be stored in safe place (min. 1m / 40 inch) to the fireplace.

•Do not place fuel in front of the fireplace.

•In case the flame does not ignite, please repeat the ignition process until the flame burns steadily.

•Fuel will burn low at first. Please allow 15 minutes to reach the optimum temperature and flame height.

Refill:

•Check carefully if there is no longer any fire on the surface. Fire have to be fully extinguished.

•WARNING! NEVER FILL A BURNING BURNER! Wait at least 20 minutes for the burner to cool down.

•For further instructions see: “Starting Up / Filling”

Extinguish:

•Please use the extinguisher tool provided in the kit. Never blow out the flame in order to put it out, this will only increase the flame.

•CAUTION: Never extinguish the flame with water!

•Let the fuel burn out completely if possible. This prevents alcohol left in the reservoir and deflagration when reigniting.

•If you wish to extinguish the flame before the fuel has completely burned out. Please use the extinguisher tool to fully close the opening of the fuel can, and wait until the flame is extinguished.

•Wait approximately 30 minutes until the burner has reached room temperature. Only then dispose remaining fuel.

•In case when the flame is not extinguished immediately, close the cover and wait approximately 10-15 minutes to allow the flame to cool down. Repeat the above instructions until the flame is fully extinguished.

Maintenance/Care Instructions:

You can use a wet cloth to clean the internal surface of a fireplace. The burner can change color because of the heat. The stainless steel will have another appearance after a while. This is normal. A regular maintenance will keep its color. Do not clean with water or put in a dishwasher. Go across the slot and the surface of the burner with a little bit of bio ethanol on a paper towel,. The stones can be cleaned if you wish with a brush and water. The cylindrical burners can be cleaned with water.

CAUTION: Never use chemicals, steel wool or scrubbing sponges either. These can scratch the surface. The manufacturer cannot be held responsible for any damages resulting out of false use and/or cleaning of the product.

Safety instruction:

•Important: The bio ethanol fireplace is to be used for decorative purposes and not as a heater.

•The use of the bio ethanol fireplace as a multi-burner or open fire for liquid or solid combustible materials is not permitted.

•Do not smoke while re-filling or lighting the burner. Risk of explosion!

•WARNING! Never re-fill a hot or warm bio ethanol fireplace. Risk of explosion!

•The flames should never directly touch the inside of the metal insert.

•Avoid physical contact with the bio ethanol.

•It is prohibited for children, people under the influence of alcohol, drugs or medications, or people who are physically or mentally not in good condition, to use the bio ethanol fireplace.

•Keep children and pets at a safe distance.

•Be careful with inflammable clothes or hair.

•Do not blow into the fire.

•Do not place paper, cardboard, fabric (clothes) etc. on the burner or around it.

•Never leave the fire unattended.

US

001-877-644-9366
customerservice@aosom.com